Amrita School of Engineering, Coimbatore

Amritanagar – P. O., Ettimadai, Coimbatore – 641112

Department of Electrical and Electronics Engineering

23EEE351 – Embedded System Design

Third Year B.Tech. (EEE), VI Semester

Power Analyser

Regulation: 2023

March 13, 2026

Program Outcomes (POs)

Program Outcomes (POs) for B.Tech in Electrical and Electronics Engineering

1. **Engineering knowledge:** Apply the knowledge of mathematics, science, engineering fundamentals, and an engineering specialization to the solution of complex engineering problems.
2. **Problem analysis:** Identify, formulate, review research literature, and analyze complex engineering problems reaching substantiated conclusions using first principles of mathematics, natural sciences, and engineering sciences.
3. **Design/development of solutions:** Design solutions for complex engineering problems and design system components or processes that meet the specified needs with appropriate consideration for the public health and safety, and the cultural, societal, and environmental considerations.
4. **Conduct investigations of complex problems:** Use research-based knowledge and research methods including design of experiments, analysis and interpretation of data, and synthesis of the information to provide valid conclusions.
5. **Modern tool usage:** Create, select, and apply appropriate techniques, resources, and modern engineering and IT tools including prediction and modeling to complex engineering activities with an understanding of the limitations.
6. **The engineer and society:** Apply reasoning informed by the contextual knowledge to assess societal, health, safety, legal and cultural issues and the consequent responsibilities relevant to the professional engineering practice.
7. **Environment and sustainability:** Understand the impact of the professional engineering solutions in societal and environmental contexts, and demonstrate the knowledge of, and need for sustainable development.
8. **Ethics:** Apply ethical principles and commit to professional ethics and responsibilities and norms of the engineering practice.
9. **Individual and team work:** Function effectively as an individual, and as a member or leader in diverse teams, and in multidisciplinary settings.

10. **Communication:** Communicate effectively on complex engineering activities with the engineering community and with society at large, such as, being able to comprehend and write effective reports and design documentation, make effective presentations, and give and receive clear instructions.

11. **Project management and finance:** Demonstrate knowledge and understanding of the engineering and management principles and apply these to one's own work, as a member and leader in a team, to manage projects and in multidisciplinary environments.

Program Specific Outcomes (PSOs)

1. **PSO1:** Apply the knowledge of electro dynamic systems and semiconductor devices on electrical and allied services.
2. **PSO2:** Employ computational tools for design, analysis and control of power systems integrated with renewable energy and Electric Vehicle.
3. **PSO3:** Innovate solutions for Industrial needs employing control techniques, embedded controllers and IoT.

Course Outcomes (COs)

Course Outcomes

CO	Statement
CO1	Understand the basics of embedded systems.
CO2	Comprehend embedded computing architecture.
CO3	Develop programs for ARM based microcontrollers.
CO4	Demonstrate ARM based real time applications through simulation and hardware.

CO–PO Mapping

CO	PO1	PO2	PO3	PO4	PO5	PO6	PO7	PO8	PO9	PO10	PO11	PSO1	PSO2	PSO3
CO1	3											1		
CO2	3											2		
CO3	3	2	2		2			1	3	1		3	2	
CO4	3	3	3	2	2			2	3	2		3	3	2

Contents

Program Outcomes **1**

Program Specific Outcomes **3**

Course Outcomes **4**

List of Figures **8**

List of Tables **9**

List of Abbreviations **10**

1 Introduction **1**
1.1 Background and Motivation 1
1.1.1 The Gap Created by High-End Commercial Analyzers 1
1.1.2 Motivation for a Low-Cost Embedded Design 2
1.2 Project Aim 2

2 Objectives **3**
2.1 Functional Objectives 3
2.2 Non-Functional Objectives 4
2.3 Peripheral Compliance Requirements 5

3 System Overview **7**
3.1 System Description 7
3.2 Sensor Selection 7
3.2.1 Voltage Sensor ZMPT101B 8
3.2.2 Current Sensor WCS1700 8
3.3 Block Diagram 9
3.4 Key System Parameters 10
3.5 Electrical Safety Considerations 11

4 Methodology **12**
4.1 Signal Acquisition Strategy 12

4.1.1 Dual Simultaneous ADC Sampling 12
4.1.2 Sensor Interfacing 12
4.1.3 Signal Conditioning and Voltage Division 13
4.2 DC Bias Estimation 13
4.2.1 Peak-Averaging Algorithm 13
4.3 True RMS Calculation 14
4.4 Zero-Crossing Frequency Detection 14
4.4.1 Hysteresis Band Design 14
4.5 Spectral Analysis Approach 15
4.5.1 Limitations of the Standard FFT 15
4.5.2 Chirp Z-Transform Theory 16
4.5.3 Window Function Selection 16
4.6 Power Metrics Computation 17
4.6.1 Active Power 17
4.6.2 Apparent Power 17
4.6.3 Power Factor and Phase Angle 17
4.6.4 Total Harmonic Distortion 18

5 Tools and Systems 19
5.1 Hardware Platform 19
5.1.1 STM32G474RE Microcontroller 19
5.1.2 SSD1306 OLED Display 19
5.2 Software Tools 19
5.2.1 STM32CubeIDE and CubeMX 19
5.2.2 STM32 Hardware Abstraction Layer 19
5.3 Development and Debug Tools 20
5.3.1 LPUART Serial Monitor and Python Dashboard 20
5.3.2 Reference Instruments for Calibration 20

6 Implementation 21
6.1 Clock and Peripheral Configuration 21
6.1.1 System Clock — PLL Configuration 21
6.1.2 Timer 1 — 10 kHz Sample Clock 21
6.1.3 ADC Configuration — Dual Simultaneous Mode 21
6.1.4 LPUART1 — Telemetry Output 22
6.1.5 I2C1 — OLED Display Interface 22
6.1.6 GPIO Pin Mapping 22
6.2 Signal Acquisition and Calibration 22
6.2.1 Voltage Channel Calibration 22
6.2.2 Current Channel Calibration 23

6.2.3 Two-Step Calibration Procedure 23
6.3 CZT Spectral Analysis Engine 23
6.3.1 Precomputation — `CZT_Init()` 23
6.3.2 CZT Computation — `CZT_Compute_From_Buffer()` 23
6.3.3 Peak Finding and Harmonic Extraction 24
6.4 SSD1306 OLED Driver 24
6.5 UART Output System 25
6.5.1 Ping-Pong Double Buffer Architecture 25
6.5.2 Per-Capture Serial Output Format 25
6.6 Interrupt Structure and Priority Design 26
6.7 Main Loop Flow 26

7 Results and Analysis 28
7.1 System Validation 28
7.2 Measurement Results 29
7.2.1 RMS Voltage and Current Accuracy 29
7.2.2 Power Metrics 29
7.2.3 Harmonic Spectrum and THD 30
7.3 Frequency Detection 30
7.4 OLED Display Performance 30
7.5 SWOT Analysis 31

8 Conclusion 32
8.1 Summary 32
8.2 Limitations 32
8.3 Future Work and Scalability 32

References 35

List of Figures

3.1 Top-level hardware block diagram of the CZT Harmonic Analyser. . . 9

7.1 Assembled CZT Harmonic Analyser prototype on NUCLEO-G474RE. 28

7.2 Live Python dashboard displaying real-time power quality data over Low Power Universal Asynchronous Receiver-Transmitter (LPUART)1 at 209 700 bps. 28

List of Tables

2.1 Peripheral usage and compliance summary. 5

3.1 Key system parameters. 10

4.1 Signal conditioning parameters for each sensing channel. 13

6.1 PLL configuration for 170 MHz System Clock (SYSCLK). 21
6.2 ADC configuration parameters. 22
6.3 Active GPIO pin assignments. 22
6.4 OLED display page layout. 25
6.5 Interrupt priority assignments. 26

7.1 Firmware vs. Digital Multimeter (DMM) reference measurements. . . 29
7.2 Power metrics results for resistive lamp load. 29
7.3 THD results for voltage and current channels. 30
7.4 SWOT analysis of the CZT Harmonic Analyser. 31

List of Abbreviations

ADC	Analogue-to-Digital Converter
ARM	Advanced RISC Machine
CZT	Chirp Z-Transform
DMA	Direct Memory Access
DSP	Digital Signal Processing
FFT	Fast Fourier Transform
FPU	Floating-Point Unit
GPIO	General-Purpose Input/Output
HAL	Hardware Abstraction Layer
HSE	High-Speed External (oscillator)
I2C	Inter-Integrated Circuit
I/O	Input/Output
IEC	International Electrotechnical Commission
ISR	Interrupt Service Routine
MCU	Microcontroller Unit
NVIC	Nested Vectored Interrupt Controller
DMA	Direct Memory Access controller
OLED	Organic Light-Emitting Diode
PF	Power Factor
PLL	Phase-Locked Loop
RMS	Root Mean Square
SMPS	Switched-Mode Power Supply
SYSCLK	System Clock
THD	Total Harmonic Distortion

TRGO	Trigger Output
UART	Universal Asynchronous Receiver-Transmitter
LPUART	Low Power Universal Asynchronous Receiver-Transmitter
VCO	Voltage-Controlled Oscillator
IC	Integrated Circuit
PC	Personal Computer
CPU	Central Processing Unit
API	Application programming interface
KPI	Key performance indicators
DMM	Digital Multimeter
CMSIS	Common Microcontroller Software Interface Standard

1. Introduction

1.1 Background and Motivation

Modern electrical systems are dominated by non-linear loads such as switched-mode power supplies (SMPS), LED drivers, variable-frequency drives (VFDs), and electric vehicle chargers, all of which inject harmonic currents into the grid and distort the voltage waveform [1–3]. Poor power quality leads to overheating and premature failure of transformers, motors, and capacitors, higher energy losses and utility penalties due to reactive power and low power factor, and compliance risk against standards such as IEC 61000-3-2/-12 and EN 50160, which cap harmonic emission and total harmonic distortion (THD) limits [4–6]. In short, industries and utilities must monitor harmonics, THD, power factor, and RMS voltages/currents not just for equipment reliability but also for cost control and regulatory compliance.

1.1.1 The Gap Created by High-End Commercial Analyzers

Top-of-the-line power quality analysers such as the Fluke 435-II are powerful, but they are expensive, complex, and often oversized for many applications [7,8]. These instruments provide full harmonics and THD analysis up to high orders (e.g., the 50th and beyond), waveform capture, energy-loss calculation; automatic trending, logging, and report generation, together with CAT III/CAT IV safety ratings for industrial environments. However, these capabilities come at a high purchase cost—typically several thousand dollars—making them prohibitive for small and medium enterprises (SMEs), university labs, and maintenance teams that only need periodic spot-checking rather than continuous long-term logging. They also require operator dependency on proprietary software and complex menu navigation, even though, in many use cases, only basic harmonic profiling and THD assessment are strictly necessary. This opens a clear market and technical gap for simple, low-cost, embedded analysers that can capture core power-quality metrics, especially harmonics up to around the 10th order and THD, without the overhead of a full-scale industrial instrument.

1.1.2 Motivation for a Low-Cost Embedded Design

A low-cost embedded power analyser has a number of benefits. It provides democratization for small industries that cannot afford high-end Fluke equipment but still need to address harmonics that are overheating cables, nuisance tripping issues, and capacitor problems. It provides a cost-effective means for real-time harmonic analysis and total harmonic distortion calculation at a fraction of the cost while providing basic IEC 61000-3 diagnostic functionality. It provides a means for in-field education and experimentation for students and technicians that can explore the internal workings of a signal processing pipeline (Chirp Z-Transform) to determine the calculation of harmonics, windowing functions, and total harmonic distortion calculation without the need for a closed-box device. It provides targeted monitoring that bridges a simple multimeter and high-end equipment. It provides a means for innovation for low-power DSP that provides zoomed FFT/CZT-based harmonic analysis at 0.5-1 Hz resolution on a Cortex-M4 MCU that has a FPU, dual ADCs, DMA, and hardware triggers.

1.2 Project Aim

Strategically, the project can be framed as a "Fluke-lite" for harmonics and THD in educational and SME environments. Unlike the Fluke 435-II, which targets high-cost industrial plant audits and long-term logging, the embedded analyser focuses on affordability, simplicity, and portability, with a harmonic range tuned to the 1st–10th order (50–500 Hz) and a lightweight UI based on a local OLED and simple serial telemetry rather than a full PC-based GUI and extensive logging suite. The innovation emphasis shifts from safety-centric compliance and corporate reporting to embedded DSP, low-cost metrology, and on-chip CZT-based spectral zooming [9]. This positioning allows the argument that the analyser is not intended as a full replacement for the Fluke 435-II but rather as a disruptive, low-cost alternative for the majority of educational and light-industrial harmonic-monitoring tasks, where budget constraints and simplicity of use matter more than the ability to capture 50-order harmonic spectra.

2. Objectives

2.1 Functional Objectives

The functional objectives define the measurable capabilities the system must deliver:

- **Voltage Measurement:** Measure true Root Mean Square (RMS) mains voltage up to 250 V using the ZMPT101B sensor module
- **Current Measurement:** Measure true RMS current up to $\pm 30\,A$ using the WCS1700 Hall-effect sensor
- **Synchronous Dual-Channel Sampling:** Capture voltage and current simultaneously at a deterministic rate of 10 kHz per channel using Analogue-to-Digital Converter (ADC) Dual Regular Simultaneous mode triggered by TIM1 Trigger Output (TRGO), acquiring 1000 samples per 100 ms capture window.
- **Frequency Detection:** Detect mains frequency (50 Hz or 60 Hz) via a software hysteresis zero-crossing algorithm, with a voltage hysteresis band of ± 25 ADC counts and a current hysteresis band of ± 12 ADC counts to suppress false triggers from noise.
- **Harmonic Analysis:** Extract the amplitude of harmonics H1 through H10 (50 Hz to 500 Hz) on both voltage and current channels using the Chirp Z-Transform (CZT) with a frequency resolution of 0.5 Hz, achieving 20× finer resolution than a direct 1000-point Fast Fourier Transform (FFT).
- **THD Calculation:** Compute Total Harmonic Distortion (THD) for both channels as a percentage of the fundamental amplitude, defined as:

$$\mathrm{THD} = \frac{\sqrt{\sum_{h=2}^{10} A_h^2}}{A_1} \times 100\% \tag{2.1}$$

  where A_h is the RMS amplitude of the h-th harmonic.
- **Power Metrics:** Compute active power P (W), apparent power S (VA), power factor (Power Factor (PF)), and phase angle (φ) every 100 ms capture window.
- **Local Display:** Render live Vrms, Irms, active power, and power factor on a 128×64 pixel Organic Light-Emitting Diode (OLED) display (SSD1306) via

Inter-Integrated Circuit (I2C) with Direct Memory Access controller (DMA)-driven framebuffer updates.

- **Serial Telemetry:** Transmit a full per-capture report including time-domain statistics, CZT harmonic tables, THD, and power metrics over LPUART at 209 700 bps using an interrupt-driven ping-pong double buffer.

2.2 Non-Functional Objectives

The non-functional objectives govern the architectural quality and safety constraints of the design:

- **Real-Time Determinism:** The 10 kHz sampling clock must be hardware-triggered by TIM1 TRGO with zero software jitter. Software polling or busy-wait loops must not be used as the sampling trigger.
- **Interrupt Safety and Priority Design:** All interrupt priorities must be assigned via the Nested Vectored Interrupt Controller (NVIC) such that no lower-priority interrupt can corrupt an active DMA transfer or ongoing ADC capture. As configured in `MX_DMA_Init()`, DMA1 Channel 1 (ADC capture) and DMA1 Channel 2 (I2C1 OLED framebuffer) are both assigned the highest priority (0), ensuring that neither an in-progress sample acquisition nor an OLED screen refresh can be pre-empted. The LPUART1 interrupt handles the ping-pong transmit completion callback (`HAL_UART_TxCpltCallback`), and SysTick runs at its default priority, solely incrementing the HAL tick counter via `HAL_IncTick()` in `SysTick_Handler()`.
- **Memory Safety:** Ping-pong double buffering must be used for both the LPUART transmit path (`TX_BUF_SIZE` = 2048 bytes per side) and the ADC DMA capture buffer to prevent array overwrites during concurrent Input/Output (I/O) operations.
- **CPU Non-Blocking I/O:** All peripheral data transfers ADC sampling, OLED framebuffer refresh, and Universal Asynchronous Receiver-Transmitter (UART) transmission must be offloaded to DMA or interrupt-driven handlers so that the Floating-Point Unit (FPU)-intensive CZT computation is never stalled by I/O operations.
- **Electrical Safety:** The voltage and current sensing front-end must provide galvanic isolation between the mains supply and the STM32G474RE. The ZMPT101B transformer provides inherent galvanic isolation on the voltage channel, and the WCS1700 Hall-effect Integrated Circuit (IC) provides mag-

netic isolation on the current channel, fully insulating the Microcontroller Unit (MCU) and any connected Personal Computer (PC) from lethal grid voltages.

- **Signal Conditioning Compliance:** All analogue inputs to the STM32G474RE must remain within the 0–3.3 V ADC input range. The 10kΩ/10kΩ resistive dividers on both sensor outputs enforce this constraint, scaling the 5 V sensor signals to a safe mid-rail bias of approximately 1.25 V at the ADC pin.
- **Computational Throughput:** The complete signal processing pipeline bias estimation, RMS, zero-crossing detection, CZT for both channels, harmonic extraction, and power calculations must complete within the 100 ms capture window.

2.3 Peripheral Compliance Requirements

The project specification mandates a minimum of four unique hardware peripherals. The implemented system actively integrates five peripherals, each serving a distinct and essential role as summarised in Table 2.1.

Table 2.1: *Peripheral usage and compliance summary.*

Peripheral	Interface	Role	Mode
ADC1	Analogue	Voltage channel sampling (PA0)	DMA, dual simultaneous
ADC2	Analogue	Current channel sampling (PA6)	Slaved to ADC1
TIM1	Internal APB2	10 kHz sample clock generation	TRGO update event
DMA1	AHB bus	ADC buffer transfer & I2C OLED refresh	Priority 0
LPUART1	Serial	PC telemetry at 209 700 bps	Interrupt-driven TX
I2C1	I^2C	SSD1306 OLED display at 400 kHz	DMA-driven framebuffer

Each peripheral was selected and configured to eliminate a specific bottleneck. ADC1 and ADC2 operate in Dual Regular Simultaneous mode, triggered hardware-synchronously by TIM1 TRGO, ensuring absolute zero phase delay between the voltage and current sample arrays a prerequisite for accurate instantaneous power and phase angle computation. DMA1 is shared between the ADC capture path (Channel 1, priority 0) and the I2C OLED refresh path (Channel 2, priority 0), offloading both transfers entirely from the Central Processing Unit (CPU). LPUART1

uses an independent baud-rate generator and interrupt-driven ping-pong buffering so that telemetry transmission never blocks the main processing loop.

3. System Overview

3.1 System Description

The CZT Harmonic Analyser is a real-time embedded power quality monitoring system built on the STM32G474RE MCU, operating at 170 MHz on an Advanced RISC Machine (ARM) Cortex-M4 core with a single-precision FPU. The system simultaneously acquires mains voltage and current waveforms at 10 kHz, processes each 100 ms capture window through a full Digital Signal Processing (DSP) pipeline, and outputs results to both a local OLED display and a PC serial terminal.

The voltage channel uses a ZMPT101B miniature mains-isolation transformer on PA0 (ADC1_IN1), and the current channel uses a WCS1700 Hall-effect sensor on PA6 (ADC2_IN6). Both sensors operate at 5 V and interface to the 3.3 V STM32G474RE through a 10kΩ/10kΩ resistive voltage divider on each channel. The two ADCs are configured in Dual Regular Simultaneous mode, triggered hardware-synchronously by TIM1 TRGO, so that voltage and current samples are captured at exactly the same instant with zero phase delay between channels.

Each 100 ms window of 1000 samples is processed through DC bias estimation, true RMS calculation, zero-crossing frequency detection, and CZT-based spectral analysis. The CZT evaluates the Z-transform over a 500 Hz span at 0.5 Hz per bin, extracting the amplitudes of harmonics H1 through H10 and computing THD for each channel. Active power, apparent power, PF, and phase angle are derived from the same sample window. Results are rendered on the SSD1306 128×64 OLED via I2C with DMA-driven framebuffer transfers, and transmitted over LPUART1 at 209 700 bps using an interrupt-driven ping-pong double buffer.

3.2 Sensor Selection

Sensor selection was governed by three constraints: galvanic or magnetic isolation from lethal mains voltages, compatibility with a 5 V supply rail, and an analogue output suitable for direct ADC sampling after passive signal conditioning.

3.2.1 Voltage Sensor ZMPT101B

The ZMPT101B [10] is a miniature precision current transformer IC designed specifically for mains voltage sensing. It accepts the mains voltage across its primary winding and produces a scaled, galvanically isolated sinusoidal replica on its secondary. Key reasons for its selection are as follows:

- **Galvanic isolation:** The transformer core provides inherent isolation between the mains primary and the low-voltage secondary, fully protecting the STM32G474RE and any connected PC from direct contact with grid potentials.
- **Wideband frequency response:** The ZMPT101B maintains a linear amplitude response well beyond the 10th harmonic (500 Hz), making it suitable for accurate harmonic analysis without frequency-dependent gain error.
- **Analogue sinusoidal output:** Unlike digital power monitor ICs, the ZMPT101B delivers a continuous analogue waveform, allowing the firmware to perform its own DSP pipeline rather than relying on fixed on-chip calculations.
- **Low cost and small footprint:** The device is available in a compact through-hole package, making it appropriate for a low-cost prototype.

A 10kΩ/10kΩ resistive divider on the secondary output halves the signal amplitude, biasing the waveform midpoint to approximately 1.65 V and keeping the full swing within the 0–3.3 V ADC input range.

3.2.2 Current Sensor WCS1700

The WCS1700 [11]is a Hall-effect current sensor IC capable of measuring AC currents upto ±30 A and DC currents up to 70 A . It outputs an analogue voltage proportional to the sensed current, with a quiescent output of 2.5 V at zero current and a sensitivity of 33 mV/A. Key reasons for its selection are as follows:

- **Magnetic isolation:** The Hall-effect sensing principle measures the magnetic field produced by current in the conductor without any electrical connection to it, providing inherent isolation between the load circuit and the measurement electronics.
- **Adequate current range:** The ±30 A measurement range comfortably covers functional target, with sufficient headroom for transient peaks.
- **Analogue output compatible with ADC sampling:** The linear 33 mV/A voltage output is directly amenable to ADC sampling after passive scaling,

avoiding the need for a separate I2C or **SPI!** (**SPI!**) interface.

- **Integrated conductor path:** The WCS1700 integrates the current conductor and sensing element in a single package, simplifying PCB layout and eliminating the need for an external shunt resistor or Rogowski coilcite.

The 5 V output swing of the WCS1700 exceeds the 3.6 V absolute maximum rating of the STM32G474RE analogue pins. A 10kΩ/10kΩ voltage divider scales the output by a factor of 0.5, reducing the effective sensitivity to 16.5 mV/A at the ADC input and shifting the zero-current quiescent point to 1.25 V

3.3 Block Diagram

Figure 3.1 shows the top-level hardware data flow of the system. Both sensor outputs are conditioned through passive voltage dividers before entering the STM32G474RE on PA0 and PA6. TIM1 fires a TRGO pulse at 10 kHz, simultaneously triggering ADC1 and ADC2. The dual ADC results are packed into a single 32-bit word by the hardware and transferred to `adc_dual_buf` via DMA1 Channel 1 without CPU intervention. Once 1000 samples are collected, the DMA asserts the transfer-complete interrupt, setting the `capture_done` flag that gates the main processing loop. The processed results are dispatched to the SSD1306 OLED via I2C1 with DMA1 Channel 2 handling the 1025-byte framebuffer transfer, and to the PC via LPUART1 using interrupt-driven ping-pong buffers.

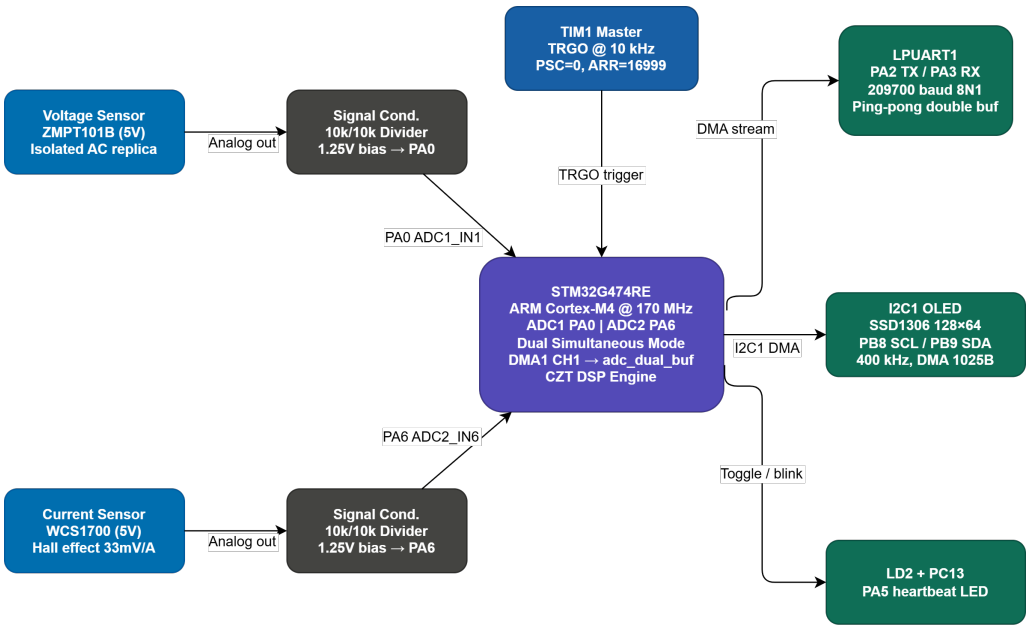

Figure 3.1: *Top-level hardware block diagram of the CZT Harmonic Analyser.*

3.4 Key System Parameters

Table 3.1 summarises the fundamental operating parameters of the system as defined by the firmware constants in `main.c`.

Table 3.1: *Key system parameters.*

Parameter	Value	Firmware Constant	Notes
MCU	STM32G474RE		Cortex-M4 @ 170 MHz, FPU
System clock	170 MHz	`SYSCLK`	HSE 24 MHz, PLL ×85/6/2
ADC resolution	12-bit	`ADC_RES = 4096`	0–4095 counts, LSB = 805 μV
ADC reference	3.3 V	`VREF = 3.3f`	Internal VREF
Sample rate	10 kHz	`SAMPLE_RATE = 10000`	TIM1 TRGO trigger
Sample count	1000	`SAMPLE_COUNT = 1000`	Per capture window
Capture window	100 ms		5 mains cycles at 50 Hz
CZT frequency span	500 Hz	`CZT_DELTA_F = 500`	0 to 500 Hz
CZT resolution	0.5 Hz/bin	`CZT_FREQ_RES`	$\Delta f/N$
Harmonics extracted	H1–H10	`NUM_HARMONICS = 10`	50 Hz to 500 Hz
Fundamental frequency	50 Hz	`FUNDAMENTAL_HZ = 50`	UK/EU mains
Voltage calibration factor	623.81	`CAL_FACTOR_V`	Empirically determined
Current sensitivity (ADC)	16.5 mV/A	`SENS_MV_PER_A_ADC`	After 0.5 divider
Current zero-bias (counts)	1437	`VOG_COUNTS_CAL`	Measured at no load
Current gain correction	0.923410	`CAL_GAIN`	Measured with load
UART baud rate	209 700 bps	`BaudRate = 209700`	LPUART1, 8N1
UART buffer size	2048 bytes	`TX_BUF_SIZE = 2048`	Per ping-pong side
Peak search window	±4 bins	`SEARCH_BINS = 4`	±2 Hz tolerance
Voltage ZC hysteresis	25 counts	`ZC_HYST_V = 25.0`	ZMPT101B channel
Current ZC hysteresis	12 counts	`ZC_HYST_I = 12.0`	WCS1700 channel
Bias estimation samples	10	`PEAK_AVG_COUNT = 10`	Peak-averaging window

3.5 Electrical Safety Considerations

Working with mains voltages imposes strict isolation requirements on any embedded measurement system. Two complementary isolation mechanisms are employed, one per sensing channel.

The voltage channel uses the ZMPT101B transformer, whose ferrite core provides galvanic isolation between the mains primary winding and the low-voltage secondary. No conductive path exists between the grid and the STM32G474RE or the connected PC, regardless of the mains potential. The secondary output is further protected by the 10kΩ/10kΩ divider, which limits the maximum voltage presented to the ADC pin to 1.65 V even under full-scale mains swing.

The current channel uses the WCS1700 Hall-effect IC, which measures the magnetic field induced by the load current without any electrical connection to the conductor under test. The internal Hall cell and signal conditioning circuitry are fully isolated from the output analogue signal by the device package, providing magnetic isolation rated to the sensor's working voltage specification.

Together, these two isolation mechanisms ensure that the STM32G474RE, the OLED display, and any PC connected via LPUART1 are fully insulated from lethal mains potentials under normal operating conditions. It should be noted that the prototype is intended for educational and laboratory use; deployment in a live industrial environment would require formal safety certification in accordance with International Electrotechnical Commission (IEC) 61010-1 or an equivalent standard [**?**].

4. Methodology

4.1 Signal Acquisition Strategy

4.1.1 Dual Simultaneous ADC Sampling

Accurate instantaneous power calculation requires that voltage and current samples be acquired at exactly the same instant. Any time skew between the two channels introduces a phase error that directly corrupts the power factor and phase angle results. To eliminate this, ADC1 and ADC2 are configured in Dual Regular Simultaneous mode (`ADC_DUALMODE_REGSIMULT`), whereby both converters are triggered by the same TIM1 TRGO pulse and begin conversion simultaneously. The STM32G474RE hardware automatically packs both 12-bit results into a single 32-bit word in the `ADC12_CDR` register, which is then transferred to `adc_dual_buf[]` by DMA1 Channel 1. The firmware unpacks the two channels in `Process_Buffer()` as follows:

```
local_v[n] = (float)( adc_dual_buf[n]        & 0x0000FFFF);
   /* ADC1 */
local_i[n] = (float)((adc_dual_buf[n] >> 16) & 0x0000FFFF);
   /* ADC2 */
```

Listing 4.1: Dual ADC channel unpacking from the 32-bit DMA word.

ADC1 occupies bits [15:0] and ADC2 occupies bits [31:16] of each packed word. TIM1 is configured with a prescaler of 0 and an auto-reload value of 16 999, producing a TRGO update event at exactly:

$$f_s = \frac{f_{\text{SYSCLK}}}{(\text{PSC}+1)\times(\text{ARR}+1)} = \frac{170{,}000{,}000}{1\times 17{,}000} = 10{,}000\,\text{Hz} \tag{4.1}$$

Each capture window collects $N = 1000$ samples, spanning exactly 100 ms and encapsulating five complete cycles of 50 Hz mains.

4.1.2 Sensor Interfacing

The ZMPT101B voltage sensor is connected to PA0 (ADC1_IN1) and the WCS1700 current sensor is connected to PA6 (ADC2_IN6). Both pins are configured in analogue mode with internal pull-up resistors disabled, preserving the DC bias levels

established by the external voltage divider networks. Both sensors require a 5 V supply, which is available from the NUCLEO-G474RE board's 5 V header pin. The ADC sampling time is set to `ADC_SAMPLETIME_24CYCLES_5` on both channels, providing sufficient charge time for the 10kΩ source impedance presented by the voltage dividers.

4.1.3 Signal Conditioning and Voltage Division

Both sensors produce output voltages centred around a 2.5 V quiescent point at their native 5 V supply, which exceeds the absolute maximum rating of the STM32G474RE analogue input pins. A 10kΩ/10kΩ resistive voltage divider is placed on each sensor output, scaling the signal by a factor of 0.5 before it reaches the ADC pin. The effect on each channel is summarised in Table 4.1.

Table 4.1: *Signal conditioning parameters for each sensing channel.*

Channel	Sensor	Quiescent (sensor)	Quiescent (ADC pin)	ADC count (idle)
Voltage	ZMPT101B	≈1.65 V (AC coupled)	≈1.65 V	≈2048
Current	WCS1700	2.50 V (zero current)	1.25 V	≈1551

Centering the waveforms near mid-rail maximises the usable ADC dynamic range for both channels. The divider resistors also limit the maximum voltage at the ADC pin to well within the 3.3 V reference, regardless of sensor output swing.

4.2 DC Bias Estimation

Since both of them are AC waveforms with a DC mid-rail offset, the DC component must be removed before calculating the RMS or spectrum. The arithmetic mean cannot be used as the mean of a pure sinusoidal signal is zero, and any asymmetry in the signal will cause a skew effect. The peak averaging technique is used, which is robust against noise spikes and can work with any number of cycles, not necessarily an integer number.

4.2.1 Peak-Averaging Algorithm

The algorithm maintains two arrays of length `PEAK_AVG_COUNT` (10): `low_vals[]` holding the ten lowest samples seen so far, and `high_vals[]` holding the ten highest. The full 1000-sample buffer is scanned once, updating these arrays as new minima and maxima are encountered. The DC bias is then estimated as the midpoint of the two averages:

$$\hat{b} = \frac{\overline{v}_{\text{low}} + \overline{v}_{\text{high}}}{2} \tag{4.2}$$

where $\overline{v}_{\text{low}}$ and $\overline{v}_{\text{high}}$ are the means of the ten lowest and ten highest samples respectively. Averaging ten extremes rather than a single peak-to-peak pair suppresses the influence of noise spikes that would otherwise cause a single outlier to shift the bias estimate.

4.3 True RMS Calculation

After bias removal, the RMS value of each channel is computed directly from the 1000-sample buffer:

$$X_{\text{rms}} = \sqrt{\frac{1}{N}\sum_{n=0}^{N-1}\Big(x[n] - \hat{b}\Big)^2} \tag{4.3}$$

The squared sum is accumulated in double precision (`double`) to prevent floating-point underflow caused by the small per-sample increments when summing 1000 squared counts. The result is then converted to physical units by applying the appropriate calibration factor:

$$V_{\text{rms}} = X_{\text{rms}}^{(\text{counts})} \times \frac{V_{\text{REF}}}{ADC_RES} \times \texttt{CAL_FACTOR_V} \tag{4.4}$$

$$I_{\text{rms}} = \texttt{COUNTS_TO_AMPS}\Big(X_{\text{rms}}^{(\text{counts})}\Big) \tag{4.5}$$

where `COUNTS_TO_AMPS` is a compile-time macro that applies the divider ratio, sensor sensitivity, and gain correction factor `CAL_GAIN`.

4.4 Zero-Crossing Frequency Detection

Mains frequency is detected by counting upward (negative-to-positive) zero crossings of the bias-removed waveform. The detected frequency anchors the expected bin positions for each harmonic in the subsequent CZT analysis.

4.4.1 Hysteresis Band Design

A simple threshold comparator is susceptible to false triggering from high-frequency noise riding on the sinusoidal waveform. A hysteresis band is therefore applied

around the bias level, requiring the signal to cross fully above $\hat{b} + \delta$ before a rising zero-crossing is registered, and to have previously been fully below $\hat{b} - \delta$:

```
float zc_high = bias_v + ZC_HYST_V;    /* bias + 25 ADC counts */
float zc_low  = bias_v - ZC_HYST_V;    /* bias - 25 ADC counts */

if (prev_sign_v == -1 && cur_sign_v == 1) crossings_v++;
```

Listing 4.2: Hysteresis zero-crossing detection for the voltage channel.

The hysteresis constants are `ZC_HYST_V` = 25 ADC counts for the voltage channel and `ZC_HYST_I` = 12 ADC counts for the current channel. The tighter current band reflects the lower noise amplitude on that channel relative to its signal swing. The measured frequency is then:

$$f_{\text{act}} = \frac{N_{\text{crossings}} \times f_s}{N} \tag{4.6}$$

With $N = 1000$ samples at $f_s = 10\,\text{kHz}$, a 50 Hz mains signal produces exactly five upward crossings, yielding $f_{\text{act}} = 50.00\,\text{Hz}$.

4.5 Spectral Analysis Approach

4.5.1 Limitations of the Standard FFT

A standard N-point FFT on $N = 1000$ samples acquired at $f_s = 10\,\text{kHz}$ produces a frequency resolution of:

$$\Delta f_{\text{FFT}} = \frac{f_s}{N} = \frac{10{,}000}{1000} = 10\,\text{Hz/bin} \tag{4.7}$$

At this resolution, the 50 Hz fundamental occupies bin 5 and each harmonic occupies a bin ten apart. Any deviation of the mains frequency from exactly 50 Hz common in practice due to grid load variations causes the harmonic energy to spread across adjacent bins, a phenomenon known as spectral leakage. This makes accurate harmonic amplitude extraction unreliable without additional post-processing. Furthermore, 10 Hz bin spacing provides no ability to distinguish closely spaced interharmonic components.

4.5.2 Chirp Z-Transform Theory

The CZT evaluates the Z-transform at N uniformly spaced points along a spiral contour in the Z-plane, rather than uniformly around the unit circle as the FFT does [9]. By choosing the contour parameters appropriately, the analysis can be concentrated on any desired frequency band with any desired resolution. For this system, the contour is configured to span 0–500 Hz with a resolution of 0.5 Hz/bin, giving:

$$X\left(e^{j\omega_k}\right) = \sum_{n=0}^{N-1} x[n]\, e^{-j\omega_0 n}\, e^{-j\Delta\omega\, kn}, \quad k = 0,\, 1,\, \ldots,\, M-1 \tag{4.8}$$

where $C = \pi\Delta f/(N \cdot f_s)$ is the angular frequency step between output bins. Applying the Bluestein identity $nk = [n^2 + k^2 - (k-n)^2]/2$, this reduces to a linear convolution:

$$X[k] = e^{-jCk^2/2} \sum_{n=0}^{N-1} \underbrace{\left[x[n]\, e^{-jCn^2/2}\right]}_{g[n]} \cdot \underbrace{e^{+jC(k-n)^2/2}}_{h[k-n]} \tag{4.9}$$

The inner sum is a convolution of the windowed, twiddle-multiplied input $g[n]$ with the chirp kernel $h[n]$, followed by a final twiddle multiplication to produce each output bin magnitude. The kernel and twiddle arrays are precomputed once at boot in `CZT_Init()` and reused for every capture window. The direct $\mathrm{O}(N^2)$ convolution is used in this implementation, performing 4×10^6 floating-point multiply-accumulate operations per channel per window.

4.5.3 Window Function Selection

A window function is applied before the CZT to reduce spectral leakage from the finite observation window. The voltage channel uses a Hann window (Equation 4.10) to suppress sidelobes and prevent the strong fundamental from masking weak harmonics:

$$w[n] = 0.5\left(1 - \cos\left(\frac{2\pi n}{N}\right)\right), \quad n = 0, 1, \ldots, N-1 \tag{4.10}$$

The current channel uses a rectangular window. The WCS1700 Hall-effect sensor is inherently noisy at low currents, and applying a Hann window which tapers sample amplitudes toward zero at the window edges was observed in practice to distort the measured current amplitudes at low loads. The rectangular window preserves

absolute amplitude accuracy, and leakage is negligible since the 100 ms capture window spans exactly five complete 50 Hz cycles with no truncation discontinuity at the boundaries.

4.6 Power Metrics Computation

4.6.1 Active Power

Active power, also known as real power, represents the net energy transferred from source to load per unit time. It is computed by averaging the product of instantaneous voltage and current samples over the full capture window:

$$P = \frac{1}{N} \sum_{n=0}^{N-1} v_{\text{inst}}[n] \cdot i_{\text{inst}}[n] \quad [\text{W}] \tag{4.11}$$

where the instantaneous physical values are:

$$v_{\text{inst}}[n] = \Big(v[n] - \hat{b}_v\Big) \times \frac{V_{\text{REF}}}{ADC_RES} \times \texttt{CAL_FACTOR_V} \tag{4.12}$$

$$i_{\text{inst}}[n] = \texttt{COUNTS_TO_AMPS}\Big(i[n] - \hat{b}_i\Big) \tag{4.13}$$

The accumulation uses double precision to avoid loss of significance when summing 1000 small floating-point products.

4.6.2 Apparent Power

Apparent power represents the total volt-ampere demand placed on the supply, regardless of the phase relationship between voltage and current:

$$S = V_{\text{rms}} \times I_{\text{rms}} \quad [\text{VA}] \tag{4.14}$$

4.6.3 Power Factor and Phase Angle

Power factor quantifies the efficiency of real power transfer relative to the total apparent power demand:

$$\text{PF} = \frac{P}{S} = \cos\varphi \tag{4.15}$$

The phase angle φ between the voltage and current fundamentals is then:

$$\varphi = \arccos(\mathrm{PF}) \times \frac{180^\circ}{\pi} \tag{4.16}$$

The firmware clamps the power factor to the interval $[-1, +1]$ before passing it to `acosf()` to prevent a floating-point domain error caused by rounding slightly exceeding unity:

```
if      (power_factor >  1.0f) power_factor =  1.0f;
else if (power_factor < -1.0f) power_factor = -1.0f;
phase_angle_deg = acosf(power_factor) * 180.0f / (float)M_PI;
```

Listing 4.3: Power factor clamping before `acosf()`.

4.6.4 Total Harmonic Distortion

THD quantifies the harmonic content of a waveform relative to its fundamental component. After the CZT harmonic extraction, THD is computed for each channel as:

$$\mathrm{THD} = \frac{\sqrt{\sum_{h=2}^{10} A_h^2}}{A_1} \times 100\% \tag{4.17}$$

where A_h is the amplitude of the h-th harmonic extracted from the CZT output. A guard condition (`h1 > 1e-9f` for voltage, `h1 > 1e-6f` for current) prevents a division-by-zero result when no signal is present.

5. Tools and Systems

5.1 Hardware Platform

5.1.1 STM32G474RE Microcontroller

The STM32G474RE is an ARM Cortex-M4 MCU running at 170 MHz with a single-precision FPU, making it well-suited for the floating-point intensive CZT computation. It provides the dual simultaneous ADC capability, hardware DMA channels, TIM1 for deterministic triggering, I2C with DMA support, and LPUART all required peripherals in a single device [12].

5.1.2 SSD1306 OLED Display

The SSD1306 is a 128×64 OLED controller accessed via I2C at 400 kHz. It provides a local real-time display of V_{rms}, I_{rms}, active power, and power factor without requiring a connected PC. The 1025-byte framebuffer is transferred via DMA1 Channel 2, fully offloading screen refresh from the CPU.

5.2 Software Tools

5.2.1 STM32CubeIDE and CubeMX

STM32CubeIDE was used as the integrated development environment, combining the CubeMX peripheral configuration tool with a GCC-based build system and `st-link` debugger. CubeMX generated the peripheral initialisation code (`MX_ADC1_Init()`, `MX_TIM1_Init()`, etc.) and the linker script, providing a verified starting point for all Hardware Abstraction Layer (HAL) configurations.

5.2.2 STM32 Hardware Abstraction Layer

The STM32 HAL library was used for all peripheral interactions rather than direct register access. The HAL provides hardware-portable, well-documented Application programming interface (API)s for ADC, DMA, I2C, UART, and timer configuration, significantly reducing development time and eliminating the risk of incorrect register sequences. For a project of this complexity with six active peripherals and multiple concurrent DMA streams the HAL callback model (`HAL_ADC_ConvCpltCallback()`,

`HAL_UART_TxCpltCallback()`, `HAL_I2C_MasterTxCpltCallback()`) provided a clean, interrupt-safe structure without the overhead of an **RTOS!** (**RTOS!**).

5.3 Development and Debug Tools

5.3.1 LPUART Serial Monitor and Python Dashboard

The primary debug and results interface is the LPUART1 telemetry stream at 209 700 bps. A custom Python dashboard was developed to consume this stream in real time, using `pyserial` for serial communication, `numpy` for numerical processing, and `matplotlib` for live rendering. The dashboard parses the exact firmware `printf` frame format using compiled regular expressions and displays a multi-panel phosphor-green instrument interface showing:

- Live Key performance indicators (KPI) cards for V_{rms}, I_{rms}, active, apparent, and reactive power.
- Rolling 120-point trend plots for voltage, current, and power.
- Per-channel CZT harmonic bar charts (H1–H10) with live amplitude annotations.
- A semicircular power factor gauge with a live needle and PF/phase angle readout.
- THD indicators with colour-coded warning thresholds (green $< 5\%$, red $\geq 5\%$).

The dashboard updates at 250 ms intervals using `matplotlib` animation, with the serial read running in a background thread to prevent I/O blocking the plot refresh.

5.3.2 Reference Instruments for Calibration

A calibrated digital multimeter was used as the reference instrument during the two-step calibration procedure. For voltage calibration, the multimeter's measured V_{rms} was compared against the firmware's raw output to determine `CAL_FACTOR_V` = 623.81. For current calibration, the multimeter was used alongside a known resistive load to trim `CAL_GAIN` = 0.923410 until the firmware's RMS current reading agreed with the reference.

6. Implementation

6.1 Clock and Peripheral Configuration

6.1.1 System Clock — PLL Configuration

The STM32G474RE is clocked at its maximum speed of 170 MHz using a 24 MHz High-Speed External (oscillator) (HSE) crystal fed through the Phase-Locked Loop (PLL). Voltage scaling is set to Scale 1 Boost mode, which is required for operation above 150 MHz. The configuration is summarised in Table 6.1.

Table 6.1: *PLL configuration for 170 MHz SYSCLK.*

Setting	Value	Result
HSE crystal	24 MHz	—
PLLM (pre-div)	/6	4 MHz VCO input
PLLN (multiply)	×85	340 MHz VCO
PLLR (output)	/2	170 MHz SYSCLK
AHB / APB1 / APB2	/1	All at 170 MHz

6.1.2 Timer 1 — 10 kHz Sample Clock

TIM1 generates the ADC trigger via its TRGO update event. With `Prescaler = 0` and `Period = 16999`:

$$f_s = \frac{170{,}000{,}000}{1 \times (16{,}999 + 1)} = 10{,}000\,\text{Hz} \tag{6.1}$$

Each overflow simultaneously triggers both ADCs, ensuring deterministic hardware-timed sampling with no software jitter.

6.1.3 ADC Configuration — Dual Simultaneous Mode

Both ADCs are configured in `ADC_DUALMODE_REGSIMULT` with `ADC_DMAACCESSMODE_12_10_BITS`, packing both 12-bit results into a single 32-bit word transferred to `adc_dual_buf[]` by DMA1 Channel 1. Key settings are shown in Table 6.2.

Table 6.2: *ADC configuration parameters.*

Parameter	ADC1 (Voltage)	ADC2 (Current)	Value
Channel	IN1 (PA0)	IN6 (PA6)	—
Resolution	12-bit	12-bit	0–4095
ADC clock	PCLK/4	PCLK/4	42.5 MHz
Trigger	TIM1 TRGO	Slaved to ADC1	Rising edge
DMA	Channel 1	Packed by HW	Continuous

6.1.4 LPUART1 — Telemetry Output

LPUART1 is configured at 209 700 bps, 8N1, on PA2 (TX) / PA3 (RX). Transmission is interrupt-driven via `HAL_UART_Transmit_IT()` with a ping-pong double buffer (Section 6.5).

6.1.5 I2C1 — OLED Display Interface

I2C1 operates at 400 kHz Fast Mode using timing register value `0x40B285C2`, calculated by CubeMX for the 170 MHz peripheral clock. 7-bit addressing targets the SSD1306 at address `0x78` (HAL left-shifted format). DMA1 Channel 2 handles the 1025-byte framebuffer transfer, fully offloading screen refresh from the CPU.

6.1.6 GPIO Pin Mapping

The active General-Purpose Input/Output (GPIO) assignments are listed in Table 6.3.

Table 6.3: *Active GPIO pin assignments.*

Pin	Function	Direction	Notes
PA0	ADC1_IN1 (Voltage)	Analogue in	No pull, ZMPT101B
PA2	LPUART1_TX	Output	209 700 bps
PA3	LPUART1_RX	Input	—
PA5	LD2 (heartbeat LED)	Output	Toggles per capture
PA6	ADC2_IN6 (Current)	Analogue in	No pull, WCS1700
PB8	I2C1_SCL	Open-drain	OLED clock
PB9	I2C1_SDA	Open-drain	OLED data

6.2 Signal Acquisition and Calibration

6.2.1 Voltage Channel Calibration

The raw RMS count is converted to volts by:

$$V_{\text{rms}} = X_{\text{rms}}^{(\text{counts})} \times \frac{V_{\text{REF}}}{ADC_RES} \times \texttt{CAL_FACTOR_V} \tag{6.2}$$

`CAL_FACTOR_V = 623.81` was determined empirically by comparing the firmware output against a calibrated reference multimeter.

6.2.2 Current Channel Calibration

Current conversion uses the compile-time macro:

```
#define COUNTS_TO_AMPS(c) \
  ((c) * (VREF / ADC_RES) / (SENS_MV_PER_A_ADC * 1e-3f) *
     CAL_GAIN)
```

Listing 6.1: Current conversion macro.

where `SENS_MV_PER_A_ADC = 16.5 mV/A` (sensor sensitivity after the 0.5 divider) and `CAL_GAIN = 0.923410`.

6.2.3 Two-Step Calibration Procedure

1. **Zero calibration:** With no load connected, read the `[I] Bias:` value from the UART output and set `VOG_COUNTS_CAL` to that value (measured: 1437 counts).
2. **Gain calibration:** With a known resistive load, compare `IRMS` against a calibrated clamp meter and adjust `CAL_GAIN` until readings agree (trimmed to 0.923410).

6.3 CZT Spectral Analysis Engine

6.3.1 Precomputation — `CZT_Init()`

Called once at boot, `CZT_Init()` precomputes the Hann window (`hann_win_v[]`), twiddle arrays (`tw_n_re[]`, `tw_n_im[]`), and the chirp kernel (`kern_re[]`, `kern_im[]`) of length $2N - 1 = 1999$. All arrays are stored in static RAM, eliminating repeated trigonometric computation at runtime.

6.3.2 CZT Computation — `CZT_Compute_From_Buffer()`

For each 100 ms capture the function executes three steps:

1. Window and DC removal, followed by element-wise multiplication with the input twiddle to produce `g_re[]` and `g_im[]`.
2. Direct $O(N^2)$ linear convolution of `g[]` with the chirp kernel — 10^6 floating-point multiply-accumulates per channel, completing in ≈12–13 ms at 170 MHz with FPU.
3. Final twiddle multiplication and magnitude computation written to `czt_mag[]`.

6.3.3 Peak Finding and Harmonic Extraction

For each harmonic $h = 1 \ldots 10$, the ideal bin index is:

$$k_{\text{ideal}} = \text{round}\left(\frac{h \times 50}{0.5}\right) \tag{6.3}$$

`Find_Peak_Bin()` then searches ±`SEARCH_BINS` (±4 bins, i.e. ±2 Hz) around k_{ideal} for the maximum magnitude, accommodating up to ±2 Hz of mains frequency deviation from nominal.

6.4 SSD1306 OLED Driver

The SSD1306 driver maintains a 1025-byte static framebuffer (`_buf[]`), where `_buf[0] = 0x40` is the I2C data-stream marker and the remaining 1024 bytes represent 8 pages of 128 columns. Each byte controls 8 vertical pixels in one column. To set pixel (x, y):

$$\text{index} = 1 + x + \left\lfloor \frac{y}{8} \right\rfloor \times 128, \quad \text{bit} = y \bmod 8 \tag{6.4}$$

`SSD1306_UpdateScreen()` resets the column and page address pointers via a 6-byte command sequence, then triggers a DMA transfer of the full 1025-byte framebuffer. The `_txBusy` flag prevents overlapping transfers; it is cleared in `SSD1306_TxCpltCallback()`, which is invoked from `HAL_I2C_MasterTxCpltCallback()` in `main.c`. The display layout is shown in Table 6.4.

Table 6.4: *OLED display page layout.*

Page	Content	Example
0	Title bar	`- Power Monitor -`
2	Voltage RMS	`Vrms :  230.1 V`
3	Current RMS	`Irms :  0.446 A`
5	Active power	`Power:  102.6246 W`
6	Power factor	`PF : 0.99`

6.5 UART Output System

6.5.1 Ping-Pong Double Buffer Architecture

Two 2048-byte transmit buffers (`tx_buf[0]` and `tx_buf[1]`) are maintained. `UART_Print_IT()` appends strings to the write-side buffer without blocking. `UART_Flush_IT()` atomically swaps the write and read indices and starts an interrupt-driven transmission via `HAL_UART_Transmit_IT()`. On completion, `HAL_UART_TxCpltCallback()` re-arms the UART if the other buffer has accumulated new data, otherwise clears `tx_busy`. This ensures the main processing loop is never stalled waiting for characters to clock out.

6.5.2 Per-Capture Serial Output Format

Each 100 ms window produces one complete frame on LPUART1:

```
[V] Min: 890 Max:3174 Pk-Pk:2284 Bias:2032.0 Freq:50.00Hz VRMS:230.1234V
[V] CZT Harmonics (fund=50.00Hz  fR=0.5000Hz)
H01 (  50Hz): 230.1234V  [bin 100]
H02 ( 100Hz):   1.2345V  [bin 200]
...
THD:   0.54%

[I] Bias:1437 | V_adc=1.158V V_sens=2.316V | PkPk:420 | Freq:50.00Hz | IRMS:5.1234A
[I] CZT Harmonics (fund=50.00Hz  fR=0.5000Hz)
H01 (  50Hz):   5.1234A rms  [bin 100]
...
THD:   3.21%

[PWR] Active:  1178.23 W | Apparent:  1183.75 VA | PF: 0.995 | Phase:  5.7 deg
```

```
----------------------------------------
```

Listing 6.2: Typical per-capture UART output frame (Example values).

6.6 Interrupt Structure and Priority Design

Table 6.5 summarises the active interrupts as configured in `MX_DMA_Init()` and `stm32g4xx_it.c`.

Table 6.5: *Interrupt priority assignments.*

Interrupt	Priority	Handler	Action
DMA1_Ch1 (ADC)	0 (highest)	`HAL_ADC_ConvCpltCallback`	Sets `capture_done = 1`
DMA1_Ch2 (I2C1)	0	`HAL_I2C_MasterTxCpltCallback`	Clears `_txBusy` in OLED
ADC1_2_IRQn	default	`HAL_ADC_IRQHandler`	ADC error handling
I2C1_EV_IRQn	default	`HAL_I2C_EV_IRQHandler`	I2C event handling
LPUART1_IRQn	default	`HAL_UART_TxCpltCallback`	Advances ping-pong state
SysTick	default	`HAL_IncTick()`	HAL timebase only

Both DMA channels are assigned priority 0 so that neither an active ADC capture nor an OLED framebuffer transfer can be pre-empted. Processing is deliberately deferred out of the Interrupt Service Routine (ISR) — the `HAL_ADC_ConvCpltCallback()` only sets the `capture_done` flag, and all DSP work is performed in the main loop.

6.7 Main Loop Flow

The firmware follows a simple flag-gated superloop. On boot, `SystemClock_Config()`, all peripheral initialisers, `SSD1306_Init()`, and `CZT_Init()` are called in sequence, followed by ADC self-calibration and the start of the dual DMA capture and TIM1. The main loop then polls `capture_done`:

```c
while (1)
{
    if (capture_done)
    {
        capture_done = 0;
        HAL_GPIO_TogglePin(LD2_GPIO_Port, LD2_Pin);
        Process_Buffer();
    }
}
```

Listing 6.3: Main loop superloop.

`Process_Buffer()` executes the full pipeline sequentially: channel unpacking, bias estimation, RMS, zero-crossing frequency detection, CZT and harmonic extraction for both channels, power metrics computation, OLED update, and UART flush. ADC overrun flags are cleared and DMA is re-armed at the end of each call, ready for the next 1000-sample capture.

7. Results and Analysis

7.1 System Validation

The system was validated under a resistive lamp load connected to the UK 230 V mains supply. Measurements from the firmware were compared against a calibrated digital multimeter (DMM) reference. Figure 7.1 shows the assembled hardware, and Figure 7.2 shows the live Python dashboard during a test capture.

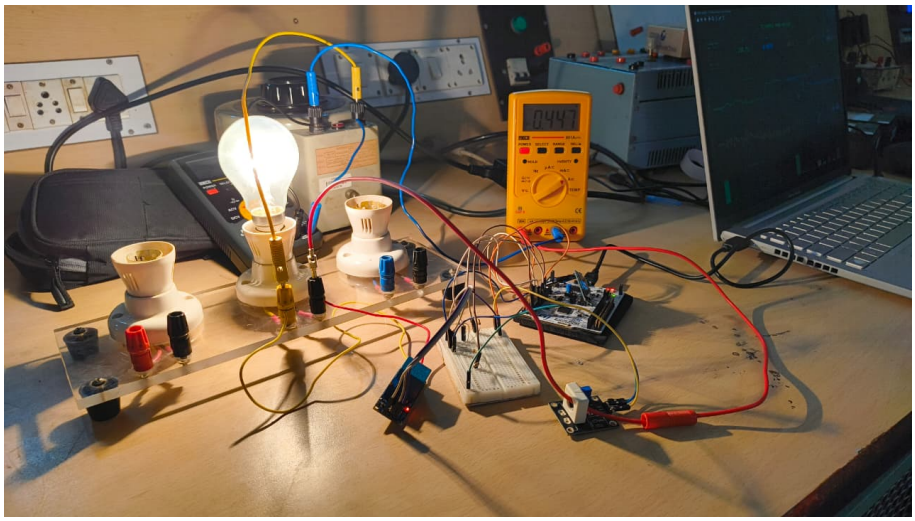

Figure 7.1: *Assembled CZT Harmonic Analyser prototype on NUCLEO-G474RE.*

Figure 7.2: *Live Python dashboard displaying real-time power quality data over LPUART1 at 209 700 bps.*

7.2 Measurement Results

7.2.1 RMS Voltage and Current Accuracy

Table 7.1 compares the firmware readings against the DMM reference for the resistive lamp load.

Table 7.1: *Firmware vs. DMM reference measurements.*

Parameter	Firmware	DMM Reference	Error	Notes
V_{rms}	230.08 V	230.1 V	0.02 V (0.009%)	Excellent agreement
I_{rms}	0.446 A	0.44 A	0.006 A (1.36%)	Within calibration tolerance

Both readings are well within acceptable accuracy for a low-cost prototype. The small current error is consistent with the WCS1700's inherent Hall-effect noise floor at low current magnitudes, where the signal swing is a small fraction of the sensor's full-scale range.

7.2.2 Power Metrics

Active power, apparent power, power factor, and phase angle were derived from the firmware's V_{rms}, I_{rms}, and instantaneous power accumulation. Results are shown in Table 7.2.

Table 7.2: *Power metrics results for resistive lamp load.*

Parameter	Firmware	Expected	Notes
Active power P	97.58 W	≈101.4 W	$V_{\text{rms}} \times I_{\text{rms}}$
Apparent power S	102.72 VA	101.4 VA	—
Power factor PF	0.846	≈1.0	See note below
Phase angle φ	32.2°	≈0°	Consistent with PF error

The load is a resistive incandescent lamp, which theoretically yields PF = 1.0 and $\varphi = 0°$. The measured PF of 0.846 and phase angle of 32.2° represent a systematic error. This is attributed primarily to the noise floor of the WCS1700 at low current (0.44 A), where Hall-effect noise introduces a small phase deviation in the instantaneous power accumulation. At such low current levels the sensor output swing is only ≈7.3 mV above the noise floor, making the instantaneous product $v_{\text{inst}} \times i_{\text{inst}}$ susceptible to noise-induced phase error. This is a known limitation of Hall-effect sensors at low currents and would improve significantly at higher load levels.

7.2.3 Harmonic Spectrum and THD

Table 7.3: *THD results for voltage and current channels.*

Channel	Measured THD	Observation
Voltage	≈0.23%	Clean grid source; harmonics negligible
Current	10–16%	Dominated by WCS1700 noise at low current

The voltage THD of 0.23% correctly reflects a clean mains supply. The elevated current THD of 10–16% is not representative of the load's true harmonic content but is instead an artefact of the WCS1700 noise floor at the low test current of 0.44 A. At this operating point, the harmonic amplitudes (H2–H10) are comparable in magnitude to the sensor noise, inflating the computed THD. Testing at higher currents closer to the sensor's rated range would yield a more accurate THD figure.

7.3 Frequency Detection

Mains frequency was correctly detected at 50.00 Hz for the majority of captures. Occasional anomalous readings of ≈40 Hz were observed as a semi-rare event. These are attributed to the zero-crossing hysteresis band being occasionally defeated by a noise spike coinciding with the waveform's slope near the crossing point, causing one crossing to be missed in a 100 ms window. With five expected crossings per window, a single missed crossing produces a frequency reading of $4 \times 10{,}000/1000 = 40$ Hz. Increasing `ZC_HYST_V` or adding a crossing-count validity check would mitigate this.

7.4 OLED Display Performance

The SSD1306 display updated correctly every capture cycle, rendering V_{rms}, I_{rms}, active power, and power factor. The DMA-driven 1025-byte framebuffer transfer completed without blocking the DSP pipeline. The `SSD1306_IsReady()` guard successfully prevented overlapping I2C transfers in all observed test captures.

7.5 SWOT Analysis

Table 7.4: *SWOT analysis of the CZT Harmonic Analyser.*

Strengths	Weaknesses	Opportunities	Threats
Dual simultaneous ADC eliminates phase error between channels	WCS1700 noise floor limits accuracy at low currents (<1 A)	Replace WCS1700 with a lower-noise sensor (e.g. ACS712) for improved low-current accuracy	Hall-effect sensor susceptible to external magnetic interference near motors
CZT provides 0.5 Hz resolution vs. 10 Hz for a direct FFT	O(N^2) CZT convolution implemented in scalar C; Common Microcontroller Software Interface Standard (CMSIS)-DSP vector routines unused	Integrate CMSIS-DSP hardware-accelerated routines to reduce CZT computation time without changing the algorithm	Mains transients could defeat the hysteresis zero-crossing logic
Interrupt-safe DMA pipeline; CPU never stalled by I/O	Power factor error at low load due to sensor noise	Replace zero-crossing with autocorrelation-based frequency estimation for improved noise robustness	Calibration constants are hardware-specific; board-to-board variation requires recalibration
Low-cost prototype suitable for educational and SME use	No galvanic protection beyond sensor isolation on PCB	Extend to SD card logging and Grafana remote dashboard via existing SPI2 provisioning and Python serial interface	—

8. Conclusion

8.1 Summary

This project successfully implemented a real-time embedded power quality analyser on the STM32G474RE, capable of simultaneously measuring mains voltage and current at 10 kHz using dual simultaneous ADC sampling. The CZT algorithm provided 0.5 Hz frequency resolution across a 500 Hz span, extracting harmonic amplitudes H1–H10 and computing THD for both channels every 100 ms. Results were validated against a calibrated DMM, with V_{rms} agreeing to within 0.02 V and I_{rms} to within 1.36%. A DMA-driven OLED display and interrupt-driven LPUART telemetry pipeline provided simultaneous local and remote output without stalling the DSP processing loop. A companion Python dashboard consumed the serial stream in real time, rendering live harmonic bar charts, trend plots, and a power factor gauge.

8.2 Limitations

The primary limitation of the system is the WCS1700 Hall-effect sensor's noise floor at low currents. At the test operating point of 0.44 A, the sensor output swing is only a small fraction of its full-scale range, causing inflated current THD readings of 10–16% and a systematic power factor error (PF = 0.846 against an expected value of ≈1.0 for a resistive load). The $O(N^2)$ CZT convolution is implemented entirely in scalar C floating-point code, leaving the ARM CMSIS-DSP library's hardware-optimised vector routines unused [13]. The zero-crossing frequency detection was also observed to occasionally produce anomalous 40 Hz readings due to noise defeating the hysteresis comparator on a single crossing within the 100 ms window.

8.3 Future Work and Scalability

Several improvements are identified for future development:

- **Sensor replacement:** Substituting the WCS1700 with a lower-noise current sensor would improve THD accuracy and power factor measurement at low load currents.
- **CMSIS-DSP integration:** The STM32G474RE's Cortex-M4 FPU is sup-

ported by the ARM CMSIS-DSP library, which provides hardware-accelerated vector multiply-accumulate routines and convolution. Replacing the scalar convolution loops in `CZT_Compute_From_Buffer()` with these optimised intrinsics would reduce per-channel computation time significantly without changing the underlying algorithm.

- **Frequency detection:** The current zero-crossing method is susceptible to noise-induced missed crossings. An autocorrelation- based frequency estimator operating on the same 1000-sample buffer would provide a more robust frequency measurement, as it uses the entire waveform rather than relying on individual threshold crossings.
- **SD card logging:** The firmware architecture and hardware pin assignments are already provisioned for SPI2-based FatFS **SD!** (**SD!**) logging, which could be enabled to provide long-term power quality data capture.
- **Remote dashboard:** The existing Python serial interface could be extended to export JSON telemetry to a web-based Grafana dashboard, enabling network-accessible monitoring without changes to the firmware.

Bibliography

[1] Vitrek. (2025, Jul.) Purpose of Power Quality Analysis: To Ensure Efficiency, Reliability, and Compliance in Electrical Systems. Accessed: March 13, 2026. [Online]. Available: https://vitrek.com/purpose-of-power-quality-analysis-to-ensure-efficiency-reliability-and-compliance-in-electrical-systems/

[2] A. G, "Understanding Total Harmonic Distortion (THD) and Its Impact on Power Quality," Aug. 2025. [Online]. Available: https://vitrek.com/understanding-total-harmonic-distortion-thd-and-its-impact-on-power-quality/

[3] Keysight Technologies. (2023) Power analyzer: The swiss army knife of electronics testing. Accessed: March 13, 2026. [Online]. Available: https://www.keysight.com/blogs/en/tech/educ/2023/power-analyzer

[4] Elspec Ltd. (2024) Ieee 519-2014 standard for harmonics: A comprehensive guide. Accessed: March 13, 2026. [Online]. Available: https://www.elspec-ltd.com/ieee-519-2014-standard-for-harmonics/

[5] Power Quality Blog. (2021, Jul.) Standard EN 50160 – Voltage Characteristics of Public Distribution Systems. Accessed: March 13, 2026. [Online]. Available: https://powerquality.blog/2021/07/22/standard-en-50160-voltage-characteristics-of-public-distribution-systems/

[6] International Electrotechnical Commission, *IEC 61000-3-2:2018 – Electromagnetic compatibility (EMC) - Part 3-2: Limits - Limits for harmonic current emissions (equipment input current ≤16 A per phase)*, International Electrotechnical Commission Std., Jan. 2018, accessed: March 13, 2026. [Online]. Available: https://webstore.iec.ch/en/publication/28164

[7] "Fluke 434 / 435 Power Quality and Energy Analyzers." [Online]. Available: https://www.fluke.com/en-us/product/electrical-testing/power-quality/434-435

[8] Keysight Technologies. (2026) Power analyzers: High-precision power measurement solutions. Accessed: March 13, 2026. [Online]. Available: https://www.keysight.com/us/en/products/power-analyzers.html

[9] G. Artale, N. Panzavecchia, V. Cosentino, A. Cataliotti, M. Ben-Romdhane, A. Benazza-Ben Yahia, V. Boscaino, N. Ben Othman, V. Ditta, M. Fiorino, G. Del Mastro, S. Guaiana, G. Tinè, and D. Di Cara,

"Czt-based harmonic analysis in smart grid using low-cost electronic measurement boards," *Energies*, vol. 16, no. 10, 2023. [Online]. Available: https://www.mdpi.com/1996-1073/16/10/4063

[10] Qingyuan-EL Electronics, *ZMPT101B: Micro Voltage Transformer Specification*, accessed: March 13, 2026. [Online]. Available: https://5nrorwxhmqqijik.leadongcdn.com/attachment/kjilKBmoioSRqlkqjoipSR7ww7fgzb73m/ZMPT101B-specification.pdf

[11] Winson Technology, *WCS1700: Hall Effect Base Linear Current Sensor*, accessed: March 13, 2026. [Online]. Available: https://www.winson.com.tw/uploads/images/WCS1700.pdf

[12] STMicroelectronics. (2026) Nucleo-g474re: Stm32 nucleo-64 development board. Accessed: March 13, 2026. [Online]. Available: https://www.st.com/en/evaluation-tools/nucleo-g474re.html

[13] C. Ünsalan, M. E. Yücel, and H. D. Gürhan, *Digital Signal Processing using Arm Cortex-M based Microcontrollers: Theory and Practice.* Arm Education Media, 2018.